ISSUE 1.1

MCS GUIDANCE DOCUMENT

Micro-Cogeneration Add-On Test Package: Test Methodology Based on PAS 67:2013

Micro-Cogeneration Add-On Test Package: Test Methodology Based on PAS 67:2013

Supplemental to the PAS 67:2013: Laboratory tests to determine the heating and electrical performance of heat-led micro-cogeneration packages primarily intended for heating dwellings.

Version: 1.1

Authors: **Steffan Cook**, Santohk Gataora

TABLE OF CONTENTS

1. INTRODUCTION

This test methodology is a supplement to the current version of the PAS67 and specifies the additional laboratory tests and calculations needed to determine the heating and electrical performance of add-on heat-led micro-cogeneration units (MCU) intended for supplementing heating systems in dwellings. An MCU designed to be added to an existing heating system is called an 'add-on MCU' or just 'add-on'.

The testing of the Add-on MCU is based on established procedures defined in PAS67: 2013 but with additional measurements to quantify the performance of the Add-on. The test results are normalised using a supplementary 'Add-on MCU Calculator' for generating installation performance data that can be used to verify qualification for MCS accreditation and for further use elsewhere where accepted e.g., the APM calculator (Annual Performance Method), SAP (Standard Assessment Procedure) or SBEM (Simplified Building Energy Model).

The comparison of the current certification and application procedures for a micro combined heat and power package (MCP), and the proposed procedure for the Add-on Micro-cogeneration Unit are shown in Figure 1. As shown in this figure, the certification application procedures for both Add-on MCU and an MCP are similar, however the Add-on MCU procedure has one additional step (i.e., the add-on calculatorstep).

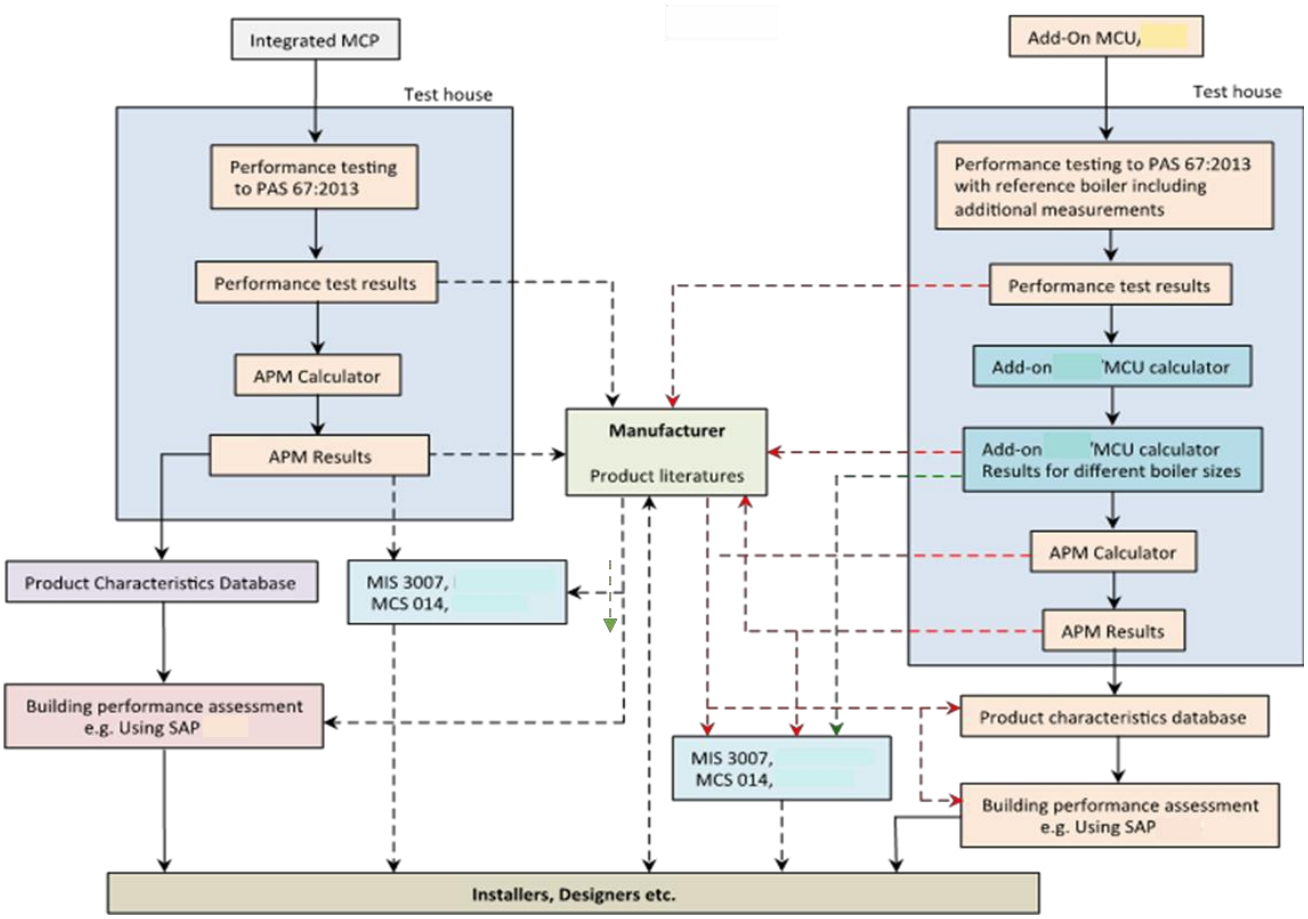

Figure 1: Certification route for an integrated micro-cogeneration heat and power package under the existing schemes (left) and the new route for the add-on micro-cogeneration heat and power unit (right).

2. FOREWORD

This document and calculator was started by Santohk Gataora, finished by Dr. Steffan Cook and final verification was by Peter Whitehead of Enertek International Ltd. Thanks go to all involved in supporting the making of this document.

3. SCOPE

This document is a description of the test method and calculations needed to qualify for MCS accreditation when an add-on mCHP unit (hereafter also called the primary heating system) is added to an existing heating system (hereafter also called the secondary heating system). It is expected that the secondary heating system will be a gas boiler but other heating technology could be viable provided the calculator is adjusted accordingly. Further processing of the final results could lead to performance data that is acceptable to be used in the SAP or SBEM.

The following assumptions apply to this test method and need to be true if valid efficiency data is to be generated.

1. The over-arching assumption is that all secondary heating systems can be reduced to simple heat or hot water coming down a pipe (here this is called *compatibility*). This allows us to simply swap any one heating system for another using normalisation to account for changes in rated power and efficiency. The ideal scenario is where the operation of the add-on MCU does not affect the operational efficiency of the secondary heating system at all, although the calculator does calculate a correction factor in the case where the primary does indeed lower the efficiency of the secondary, in general this should be avoided.
2. The add-on and secondary heating equipment must follow the principle of *compatibility,* and therefore the secondary heating equipment should be interchangeable. As we can't guarantee all secondary heating equipment will have similar control systems or physical arrangement, the add-on MCU cannot "rely" on the secondary heating equipment in order to work normally. In the circumstances where it can be argued technically that a certain functionality is shared across all types of gas boilers then this limitation does not apply, as the principle of *compatibility* is maintained.
3. The max power rating of the secondary heating system at the target installation site must be within certain limits. As a lower limit, the rated heat output of the reference boiler (and target installation boiler) must be at least ten (10) times bigger than the add-on. For example, a 1KW add-on should be

partnered with at least a 10KW secondary or target installation heating system. This is for a practical testing reason as it ensures that even at the lowest 10% heat load test, that the add-on should be at or very close to its maximum rated heat output. At the upper limit; an add-on tested with a reference secondary system of a rated power should only be added to existing installation that is up to twice as powerful as the reference system. For instance, if the add-on is tested with a 20KW gas boiler than a target installation site with a 40KW gas boiler is the maximum allowed.

Further to the assumptions above that apply to the calculator the following rules will be followed as part of the standard and best practice.

It is expected that the heat output from the add-on will be small compared to the companion boiler, so for testing purposes, the heat load at 100% will be the same max output as that of the reference gas boiler (or other fuel as appropriate). If specifically requested, the sum of the rated outputs of the primary and secondary heating systems can be used as the 100% heat load instead. This may have advantages outside of MCS certification for instance in intermediate SAP result. Whichever method you use to calculate 100% heat load value, it is not expected to have any effect on the viability of the calculator results.

Packages designed for testing under the PAS67 can also be tested under the add-on test and the results should be identical. If there is a discrepancy, then the results from the current version of the PAS67 if available should take precedence.

This test is NOT an alternative route to certification for appliances that are 'electricity-led'. These remain under the specifics of the MCS15 standard.

This document is NOT to be used where heat or hot water is passed on to another heat or hot water store that is outside of the testing framework. Although the secondary heating system and hot water store may be exchangeable, those components are part of the framework for end delivery of heat and hot water and are part of the tested and proven set-up. Set-ups where heat or hot water is passed on to other heat stores outside of the tested framework, cannot be proven to function as intended and therefore should not use this test.

This document is NOT to be used where the add-on has its own unique set of emitters separate from those of the secondary heating system.

This document is NOT to be used where the add-on works according to a pre-programmed schedule and is insensitive to a heat demand signal.

Please see the LOG for notes and discussions on the above limitations.

4. NORMATIVE REFERENCES

- PAS67:2013
- MCS14
- MCS15
- BS1566-1:2002

5. TERMS AND DEFINITIONS

For the purposes of this document the following terms and definitions apply. These are based on the original definitions from the PAS67, however where there is a conflict between definitions in this document and the latest version of the PAS67, then these definitions shall prevail.

Term	Definition
Micro-cogeneration unit	The assembly of co-generator with associated equipment (hot water storage, thermal store, control system etc) that makes the entirety of the add-on but excludes the existing heating system (e.g., the existing gas boiler)
Micro-cogeneration package (as referred to in the MCS14)	A co-generator with associated equipment, providing all space heating and domestic hot water (both or either as appropriate). In this case, the package would be tested under the latest version of the PAS67 and not the add-on standard.
Prime mover	The main component of the Micro-Cogeneration Unit (MCU); a combined heat and power source
MCU	See Micro-Cogeneration Unit above. Should include; the prime mover, hydraulic and control interface equipment, a hot water or thermal store etc
Plant Size Ratio	Nominal Heat Rated Output ÷ Design Heat Loss of

	the Building [unitless but expressed as KWH/KWH]
HPER Rate	Heating Plant Emission Rate [kg CO2/kWh]
Primary or Secondary heating system/equipment	As the add-on mCHP is intended to be the first equipment to respond to any call for heat, then the MCU is called the primary heating system. The existing heating system or equipment will be the secondary heating system.
Add-on (also add-on MCU)	See MCU
Primacy	For any level of demand for heat, a measure of how much heat is delivered from the primary heating system compared to the heat delivered by the secondary heating system.
Compatibility	An add-on and secondary heating system are considered compatible where the secondary heating system is reduced to simply giving heat or hot water down a pipe and there are no further interactions between add-on and secondary heating system. For example, a primary and secondary system would be incompatible if the secondary causes the primary to no longer function under certain heat loads.

6. ABBREVIATIONS

For the purposes of this document the following abbreviations apply. For the purposes of this document the following abbreviations apply. These are based on the original definitions from the PAS67, however where there is a conflict between definitions in this document and the latest version of the PAS67, then these definitions shall prevail.

Abbreviation	Full Term
CV	Gross calorific Value
mCHP	Micro-cogeneration heat and power

PCDB	Product characteristics database
APM	Annual Performance Method
ICE	Internal combustion engine
NCM	National Calculation Methodologies
SBEM	Simplified Building Energy Model
HPER	Heating Plant Emission Rate [kg CO2/kWh]

7. SYMBOLS

For the purposes of this document the following symbols apply. All values are based upon the use of gross calorific value of the fuel. For the purposes of this document the following symbols apply. These are based on the original definitions from the PAS67, however where there is a conflict between definitions in this document and the latest version of the PAS67, then these definitions shall prevail.

Symbol	Unit	Designation
kWhh		Unit of Heating energy output
kWhe		Unit of Electrical energy output

8. ADD-ON MICRO-COGENERATION UNIT AND TEST PROCEDURE

8.1 DESCRIPTION

The Add-on Micro-Cogeneration Unit (i.e. "Add-on MCU") is designed to integrate with the existing space and/or hot water heating systems in a domestic or commercial building and to use the existing main heat source (e.g. a gas boiler) to supplement the heat produced by the Add-on MCU when required. The main components of the Add-on MCU are listed below and typical examples of test configurations are shown schematically in Figure 2, Figure 3 and Figure 4.

a) Prime mover (e.g. Fuel Cell, ICE).

b) Control and hydraulic packages for integrating with existing system.

c) Domestic hot water cylinder or an integrated thermal store (if these are part of the Add-on package).

d) Installation and operating instructions.

8.1.1. ADD-ON MCU FOR SPACE AND HOT WATER HEATING (REGULAR AND COMBI TYPE)

REGULAR CONFIGURATION ADD-ON WITH AN EXTERNAL HOT WATER STORAGE VESSEL

A regular configuration add-on consists of a prime mover, controls package and a hydraulic interface unit (e.g. control valve, headers, thermal store etc.) and is designed to be added via the hydraulic interface unit of the MCU to an existing system that contains a secondary heating system (e.g., boiler), emitters and a hot water cylinder. In a regular configuration the domestic hot water is provided via a hot water storage vessel external to the add-on MCU. Where the manufacturer specifies a range of hot water cylinders for use; then the cylinder with the smallest volume of water, largest standing heat loss and smallest heat exchanger surface area shall be used (sequential order of importance if all criteria cannot be achieved). Where the cylinder chosen has specifications that are on the PCDB database, the published standing heat loss (Kwh/day: BS1566-1:2002) can be used without the need to measure cylinder case losses. Where the cylinder is not on the PCDB, the cylinder case losses should be measured as per the current version of the PAS67.

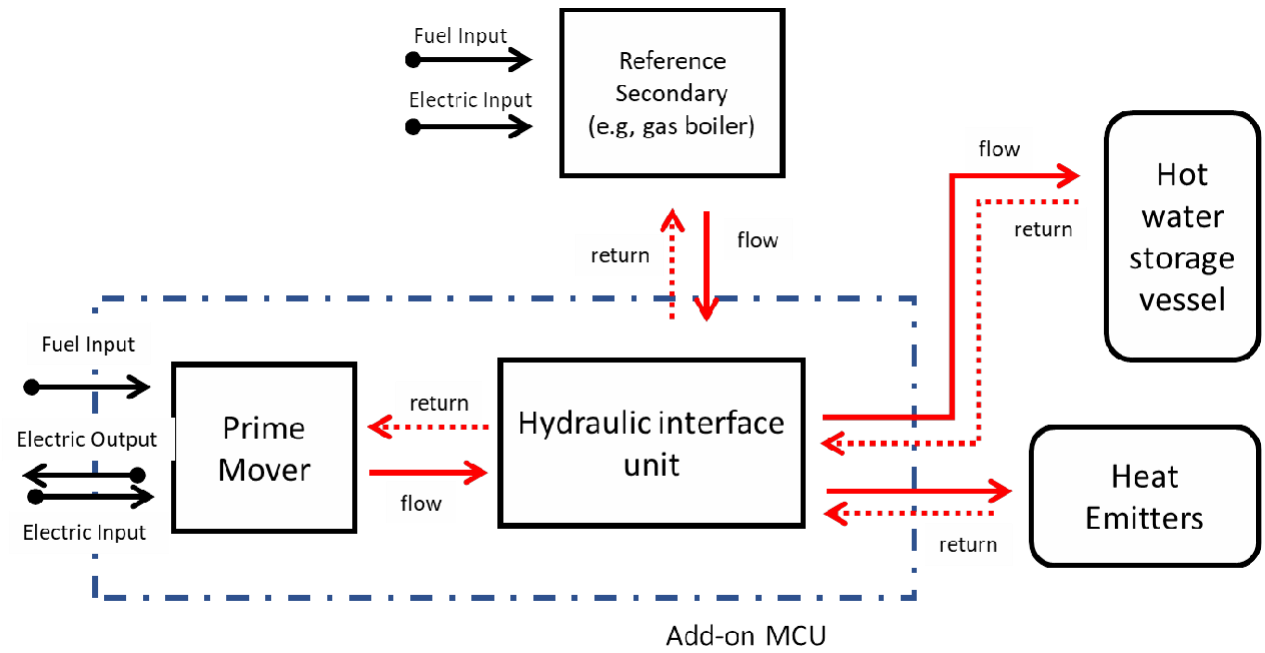

Figure 2: Example schematic of a RegularPK arrangement of add-on MCU and secondary heating system (e.g., gas boiler) where the hot water storage vessel is external to the add-on MCU itself.

COMBI CONFIGURATION WITH HOT WATER PRODUCED INSIDE THE MCU

A combi configuration Add-on MCU shown in Figure 3 consists of a prime mover, controls package and a hydraulic interface unit etc, where the hot water is meant to be provided from wholly within the MCU. In this case the existing hot water cylinder in the building (if present) would normally be expected to be disconnected. Where a range of possible hot water cylinders (providing either DHW or thermal storage) incorporated into the MCU exist, each configuration will preferably be tested individually, however as a minimum the hot water cylinder the smallest volume of water, largest standing heat loss and smallest heat exchanger surface area shall be used (sequential order of importance if all criteria cannot be achieved).

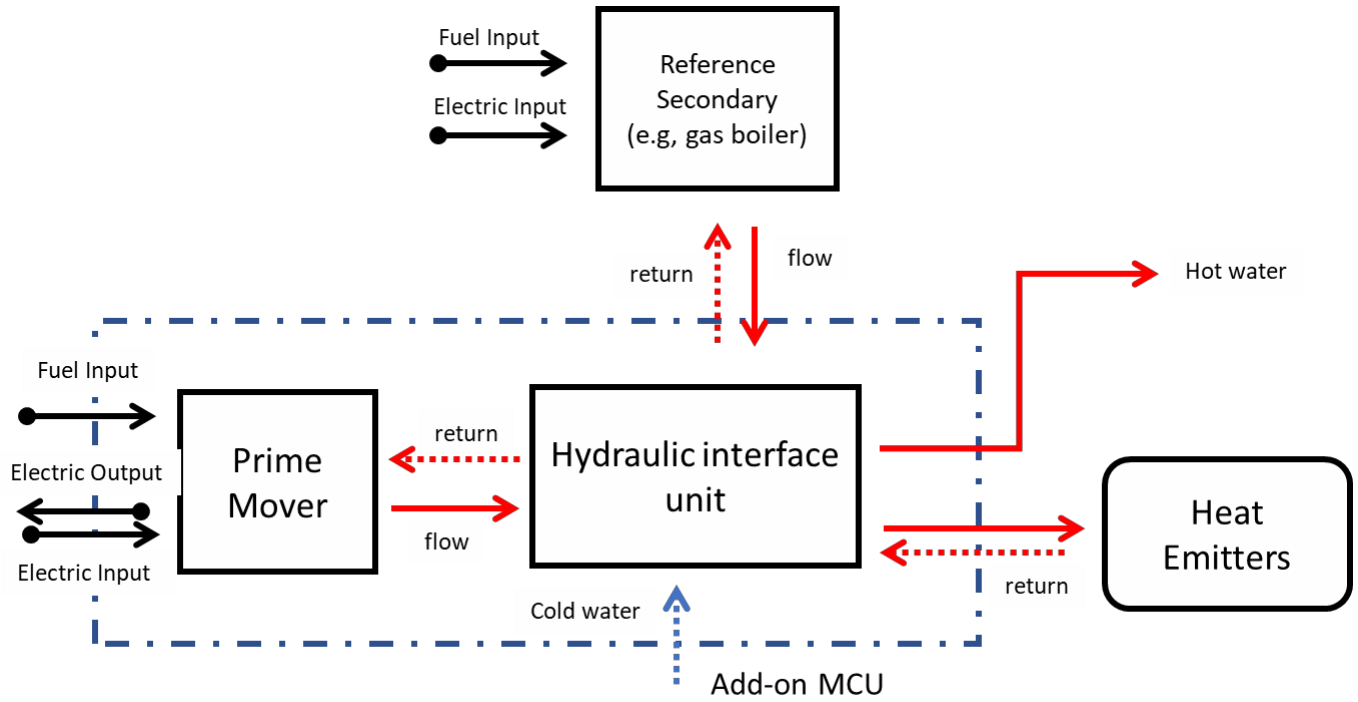

Figure 3: Example of a CombiPK arrangement where hot water delivery is part of the hydraulic interface unit.

8.1.2. ADD-ON MCU FOR SPACE HEATING ONLY

An example of Add-on MCU designed for space heating only is shown in Figure 4. It consists of a prime mover, controls package and a hydraulic interface unit (e.g. control valve, headers, thermal store etc.). This is designed to connect to the existing space heating system only.

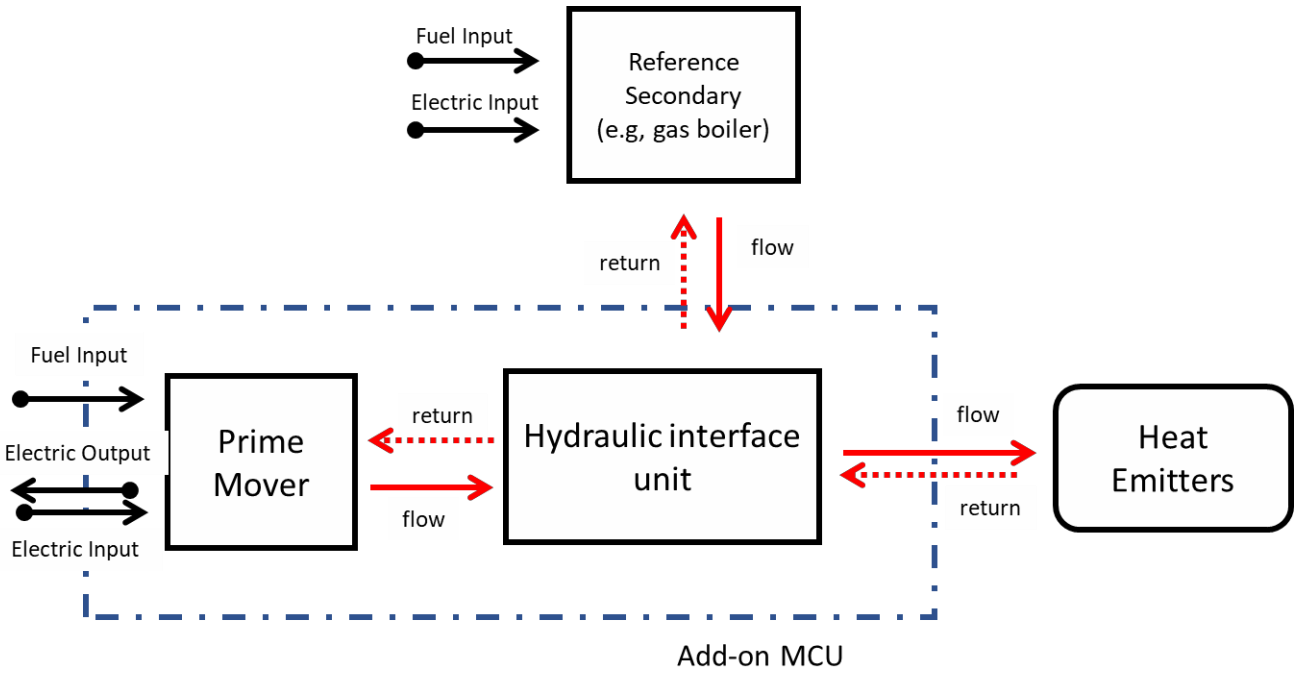

Figure 4: Example of a HeatPK arrangement (no hot water delivery).

8.1.3. ADD-ON MCU FOR HOT WATER (DHW) HEATING ONLY (REGULAR AND COMBI CONFIGURATION TYPE)

As for the case of Add-on MCU for heating and hot water, however without the need for space heating provision.

8.2. PROPOSED TEST METHOD FOR ADD-ON MCU

8.2.1. KEY REQUIREMENTS OF TEST METHODOLOGY

The performance test modes and the test regimes defined in the current PAS 67 (at time of publication version 2013) will be used for evaluating the performance of the Add-on MCU using the reference secondary heat source and other equipment specified by the manufacturer. The PAS67 based test methodology described in this document was selected because it had the following attributes: -

a) The test method is capable of showing *compatibility* (or lack of) between the add-on and a secondary heating system and measuring the efficiency of the Add-on MCU when linked to the secondary at different heat loads.
b) The test results measured using the reference system, should be scalable to a range of buildings and heating system within the predefined limits without retesting.
c) The current PAS 67:2013 test methodology can be used with minimum changes but with additional measurements.
d) The test results should be suitable for using the calculators for domestic and non-domestic buildings

e.g. PAS67 APM.

8.2.2. TEST METHODOLOGY FOR THE ADD-ON MCU – GENERAL

a) The Add-on MCU should be tested as a complete entity specified by the manufacturer (e.g. controls, hydraulics assembly, hot water vessel etc.) and should be installed and operated as per manufacturer's instructions.

b) The Add-on MCU should be tested with a reference secondary heat source of an agreed heat output rating and type (e.g. 30kW, gas boiler) but the testing facility shall choose the reference secondary heating system in order to maintain consistency in testing between add-ons, unless the chosen unit is specifically excluded from use in the manufacturer's instructions.

c) For reference testing, the space heating power at 100% load factor should preferably be the same as the rated heat output of the reference test boiler, or optionally the value of the reference test boiler and add-on combined. In both cases, at all load factors the add-on should be operating within 10% of the add-on's nominal heat rated output.

d) In addition to the standard PAS 67:2013 performance measurements, the following additional measurements should be made: -
   - Fuel energy used by reference heating system
   - Electrical energy used by reference heating system
   - Heat supplied by the reference heating system to meet test energy demand.

e) All reference test results should be entered into the Add-on MCU calculator followed by the specifics of the secondary heating system. The resulting estimated performance of the add-on and target secondary system is then calculated. These may be used to work-out compliance with MCS standards or put to further use just like other PAS67 results (e.g., into the standard APM calculator).

Note: An energy balance check on the secondary heating system is not necessary. Electricity and gas usage are monitored in order to allow for electricity and gas usage correction factors to be calculated and used in the add-on calculator.

8.2.3. SPACE HEATING TESTS FOR THE ADD-ON MCU

a) The space heating performance tests should be carried out at least at 100%, 30% and 10% load factors.

Note: *Depending upon the performance characteristics of the Add-on MCU (see figure 3.3), space heating performance tests at intermediate load factor (e.g. 50% or 60%) should be considered. This will enable the APM calculator to predict the performance more accurately for installation in dwellings.*

A possible testing arrangement for heat tests for *heat, combi* and *regular* add-on MCUs is shown in Figure 5.

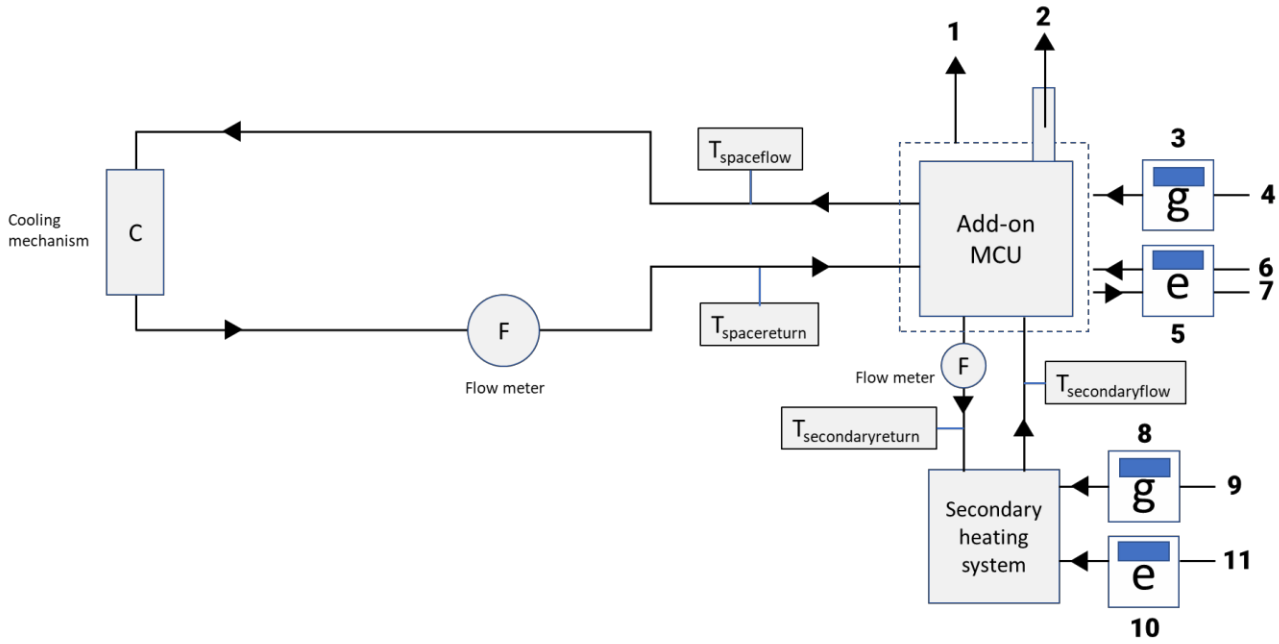

Figure 5: Possible testing arrangement for heat tests using a heat-only, combi or regular add-on.

KEY: (1) Total energy loss form the case; (2) Total energy loss from flue; (3)Gas meter#a; (4) Total energy of fuel consumed; (5) Electricity meter; (6) Total electricity input; (7) Total electricity output; (8) Gas meter#a; (9) Total energy of fuel consumed by the secondary heating system; (10) Electricity meter; (11) Total electricity input into secondary heating system. #a) For fuel other than gas an appropriate technique specified within the PAS67 shall be used to calculate fuel energy input.

8.2.4. DHW TESTS FOR THE ADD-ON MCU

a) DHW performance test should be carried out as per PAS67: 2013 or as additionally requested by the manufacturer.

b) DHW performance testing is not required for Add-on MCU designed for space heating only.

Note: *Depending upon the performance characteristics of the Add-on MCU, DHW performance tests at more than one hot water tapping cycles should be considered.*

A possible testing arrangement for hot water tests for combi add-on MCUs is shown in **Error! Reference source not found.**, while possible testing arrangements for hot water tests for regular add-on MCU's is shown in Figure 7.

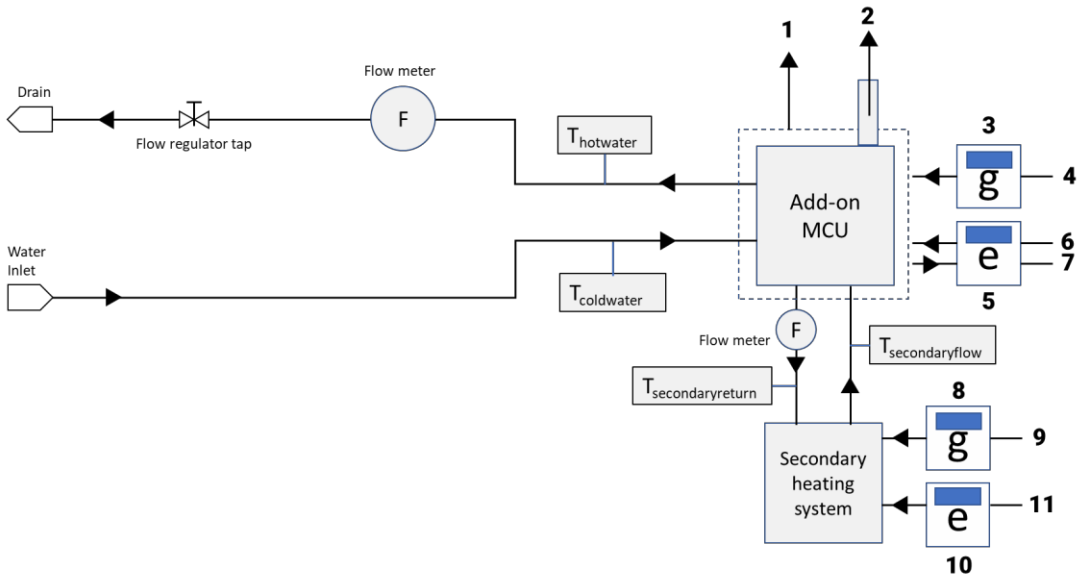

Figure 6: Possible arrangement for hot water tests using a combi add-on MCU (without external hot water tank).

KEY: (1) Total energy loss form the case; (2) Total energy loss from flue; (3)Gas meter#a; (4) Total energy of fuel consumed; (5) Electricity meter; (6) Total electricity input; (7) Total electricity output; (8) Gas meter#a; (9) Total energy of fuel consumed by the secondary heating system; (10) Electricity meter; (11) Total electricity input into secondary heating system. #a) For fuel other than gas an appropriate technique specified within the PAS67 shall be used to calculate fuel energy input.

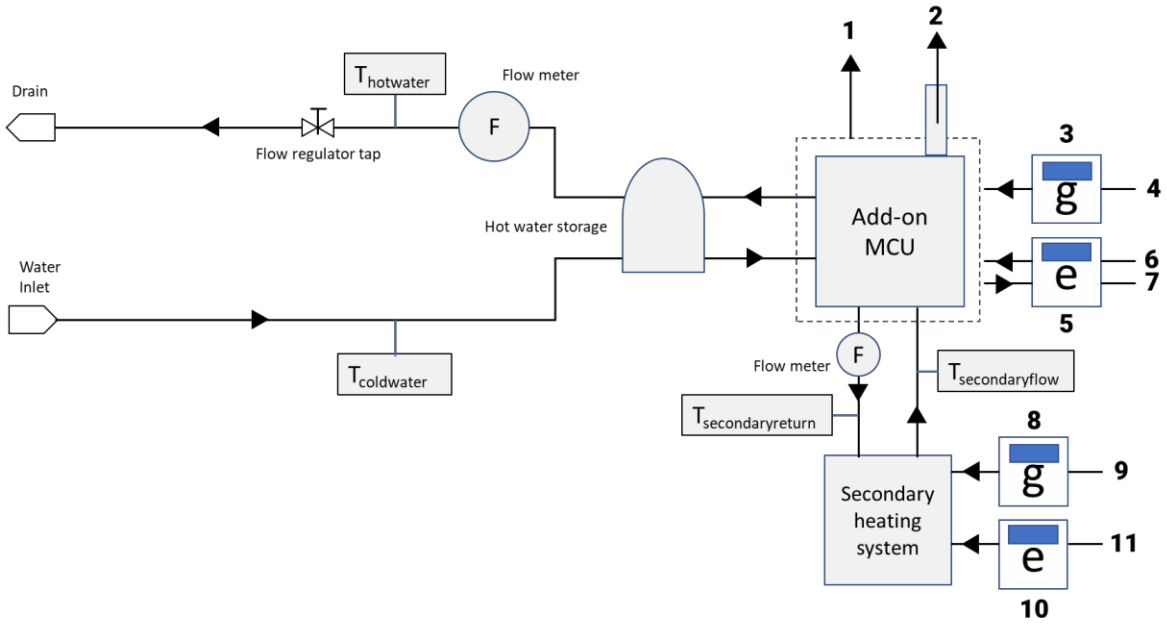

Figure 7: Possible testing arrangement for hot water tests using a regular add-on MCU (with external hot water tank).

KEY: (1) Total energy loss form the case; (2) Total energy loss from flue; (3)Gas meter#a; (4) Total energy of fuel consumed; (5) Electricity meter; (6) Total electricity input; (7) Total electricity output; (8) Gas meter#a; (9) Total energy of fuel consumed by the secondary heating system; (10) Electricity meter; (11) Total electricity input into secondary heating system. #a) For fuel other than gas an appropriate technique specified within the PAS67 shall be used to calculate fuel energy input.

9. ADD-ON MCU CALCULATOR

The Add-on MCU calculator is an excel file that adjusts performance results obtained for an add-on with a reference secondary heating system to create predicted results for the add-on with any possible secondary heating system that might be at the target installation site (within the limits described in the Scope). Currently, the calculator is limited to the use of gas boilers as a secondary heating system but could be expanded to use other secondary heating equipment such as heat pumps, given suitable test lab benchmarks. The predicted results are equivalent to those obtained under the standard PAS 67 test results and can be used appropriately with other tools for demonstrating compliance with the relevant building regulations (an overview of the process is shown in Figure 1). The excel workbook based "***Add-on MCU Calculator***" has multiple input and output sheets (See Section 11 : Appendix 2 for a detailed description).

9.1 EXAMPLE CALCULATOR RESULTS FROM A HYPOTHETICAL MCU

A hypothetical Add-on MCU coupled to a reference 30kW test boiler has been created to demonstrate the calculator in generating PAS 67 test results. The key calculated results for this hypothetical MCU are shown below in Table 1.

These results were then used to calculate the performance of the system using the "*PAS67 APM (rev 4e V5.05)*" calculator and the selected APM output results are shown in Table 2. These results were used to validate the test and scaling procedures for the Add-on MCU calculator.

Test load Factor	Gross fuel Energy input [QF_MCU]	Energy output to Space heating (QH_CH)	Electrical Output [QE_OUT]	Electrical Input [QE_IN]	Net Emissions	Package efficiency [%]	
[%]	[MJ/24h]	[MJ/24h]	[MJ/24h]	[MJ/24h]	[kgCO2/day]	Electrical	Overall
0.00 (Standby)	0.00	0.00	0.00	0.860	0.12	0.00	0.00
10.00	344.05	207.36	73.58	0.135	10.06	21.34	81.61
30.00	797.15	622.08	73.58	0.133	37.24	9.21	87.25
60.00	1,504.76	1,244.16	68.80	0.177	80.39	4.56	87.24
100.00	2,500.85	2,073.60	62.70	0.238	141.04	2.50	85.41
DHW Heating	51.37	21.06	17.65	0.693	0.64	33.00	73.95
Note: *60% load factor test is not mandatory in PAS67. It is used in this document to illustrate the test and analysis procedures.*							

Table 1: Calculated test results for the hypothetical MCU – Operating in Regime 1

Plant size ratio	0.5	1.0	1.5	2.0	3.0	6.0	10.0
Thermal efficiency – Space heating (% gross)	81.9	77.7	72.9	68.4	61.4	47.5	58.6
Electricity consumption for space heating (kWh_e per kWh_h)	-0.055	-0.113	-0.169	-0.220	-0.312	-0.446	-0.355

Table 2: APM results for the hypothetical MCU. These results are obtained by passing the data in Table 1 through the APM calculator (*rev 4e V5.05). In your own workings please use the latest version of the APM calculator.*

10. APPENDIX 1: PERFORMANCE SPECIFICATION OF THE HYPOTHETICAL ADD-ON MCU

The performance specification of the modelled results of the hypothetical Add-on MCU shown in Section 9 are presented in Table 3-5.

Standby power consumption		Run Mode power consumption		Reference Boiler rating	Hot water storage vessel	
Add-On-MCU	Reference Boiler	Add-On-MCU	Reference Boiler		Capacity	Heat loss rate
[kW]	[kW]	[kW]	[kW]	[kW]	[Litres]	kWh/24h
0.006	0.006	0.057	0.031	30.00	150	1.50

Table 3: Specification of the hypothetical Add-On-MCU

Heating Load Factor	Space heating Load		Add-on Micro-cogeneration package					
			Heat supplied	Power generated	Power used	Power exported	Gas used	Net CO_2 Emissions
[%]	[kWh/24h]		[kWh/24h]	[kWh/24h]	[kWh/24h]	[kWh/24h]	[kWh/24h]	[kgCO_2/24h]
10.00	64.80		41.82	27.54	1.18	26.36	78.13	3.20
30.00	194.40		43.30	28.51	1.22	27.29	80.89	3.31
60.00	388.80		42.88	27.76	1.25	26.51	80.98	3.73
100.00	648.00		41.95	26.50	1.27	25.23	80.29	4.25
Standby mode	0.00		0.00	0.00	0.14	-0.14	0.00	0.07
DHW heating	5.85		7.10	4.48	0.33	4.15	13.59	0.78

Table 4: Specification of a hypothetical Add-On-MCU continued

Heating load Factor	**Space heating Load**	**Heat supplied By Ref-Boiler**	**Estimated Ref- Boiler On-Time**	**Power used By Ref-Boiler**	**Gas used by By Ref-Boiler**	**Net CO_2 Emissions By Ref-Boiler**	**Total gas used By System**	**Total CO_2 Emissions By system**	**Total power Exported by System**
[%]	[kWh/24h]	[kWh/24h]	[h/24h]	[kWh/24h]	[kWh/24h]	[kgCO_2/24h]	[kWh/24h]	[kgCO_2/24h]	[kWh/24h]
10.00	64.80	22.98	6.48	0.31	25.53	5.67	103.66	8.87	26.05
30.00	194.40	151.10	20.00	0.64	167.89	36.60	248.78	39.91	26.65
60.00	388.80	345.92	20.00	0.64	384.36	83.36	465.34	87.09	25.87
100.00	648.00	606.05	21.00	0.67	673.39	145.80	753.68	150.05	24.56
Standby mode	0.00	0.00	0.00	0.14	0.00	0.07	0.00	0.15	-0.29

DHW heating	5.85	0.37	0.042	0.15	0.42	0.16	14.00	0.95	4.00

Table 5: Specification of a hypothetical Add-On-MCUcontinued

The above data for a hypothetical add-on MCU was used in the Add-on calculator to generate PAS67 equivalent results as a test of the calculator.

11. APPENDIX 2: DESCRIPTION OF THE ADD-ON MCU CALCULATOR

The excel workbook based "***Add-on MCU Calculator***" has multiple sheets with both inputs and outputs.

11.1 SHEET "MANUFACTURER'S DECLARATION"

The manufacturer's declarations for the Add-On-MCU are entered in this sheet. Please fill and enter exact data as the calculator uses this data for designating the package testing and operating parameters in other sheets.

11.2 SHEET "REF_DATA" - REFERENCE VALUES USED FROM EXTERNAL SOURCES

This contains values from external sources used by the calculator. Please ensure that the latest values from the current version of the SAP or other sources are inserted here.

11.3 SHEET "REFERENCE TEST DATA"

The specification of the chosen reference boiler and then the resultant Add-On MCU test results are entered here. The only output of this sheet is a summarised set of results in the PAS67 format (Table RT_08) and an emissions comparison between the performance of the add-on with boiler against an equivalent boiler only [TableRT_09].

Note: *In TableRT_09, if all fields (except the Standby results) show a net reduction in CO2 emissions by using the add-on, then this is proof of passing the Environmental Performance criteria as required by the current MCS Standard for add-ons (currently the MCS 014). Use of the 'Installation Package' sheet is not necessary, as a proven net reduction against a reference boiler will mean a net reduction with any gas boilers within the scope of the calculator's limits.*

11.4 SHEET "INSTALLATION PACKAGE"

This is the sheet in the calculator that scales results from the reference system into predicted performance results for a target boiler. The sheet will also do some validity checking on the suitability of the target installation site.

The target boiler specifications are entered into Table IS_1, the hot water set-up at the installation site in TableIS_2. The results are scaled in Tables IS_3-5 and the final results presented in a PAS67 format in TableIS_6. For a quantitative comparison of the emissions reduction over the target boiler by using an add- on, these results are shown in TableIS_8.

Underneath TableIS_8 are further tables with intermediate calculations. These are to show workings only and show no useful information.

The methodology used for scaling the reference test results to the system in the installation dwelling is presented in Appendix 3 and summarised below.

The scaling procedure is based on following main assumptions:

- The space heating flow and return temperatures for the installation system are the same as the

reference test boiler.

- The heating operating mode (e.g. continuous, bimodal etc.) is the same as the reference test system.
- The system control logic and controls for optimizing the operation of the prime mover in the Add-On MCU are same.
- The modulation band of the target boiler is similar to that of the reference boiler.

Space heating performance Example Calculations:

The 10%, 30% 60% and 100% space heating load factors are calculated for the installation dwelling and the boiler and the new values are calculated as below (30% load factor is used as an example).

<u>Reference system data at 30% load factor</u>

1.	Heating load	= 173.73 kWh/24h	
	▪ Load supplied by Add-On MCU	= 28.46 kWh/24h	
	▪ Load supplied by boiler	= 145.27 kWh/24h	
	▪ Net electricity produced by Add-On MCU	= 28.46 kWh/24h	
	▪ Fuel used by Add-On MCU	= 20.40 kWh/24h	
	▪ Fuel used by boiler	= 160.40 kWh/24h	

<u>Scaled data for the new installation system</u>

2.	Heating load	= 122.40 kWh/24h	
3.	Load supplied by Add-On MCU	= 28.46 kWh/24h	*No change*
	▪ Load supplied by boiler	= 93.94 kWh/24h	
	▪ Net electricity produced by Add-On MCU	=28.46 kWh/24h	*No change*
	▪ Fuel energy used by Add-On MCU	= 20.40 kWh/24h	*No change*
	▪ Fuel used by boiler	= 111.57 kWh/24h	*Predicted*

Note: *If the new heat demand at a given load factor is less than the heat supplied by the Add-On MCU alone then the workings of the calculator becomes invalid (there is no information on the modulating efficiency of the add-on MCU).*

12. APPENDIX 3: ADD-ON MCU CALCULATOR PROCEDURES (ALGORITHMS)

12.1 PROCEDURE 01: CALCULATED STANDBY PERFORMANCE OF THE ADD-ON MCU SYSTEM IN THE INSTALLATION DWELLING

12.1.1. ASSUMPTIONS

- Standby performance of the *Add-On-MCU* is independent of the size and type of the building and the thermal output rating of the secondary boiler.
- The secondary boiler will not operate at all during the standby-operating mode of the system (e.g., there is no 'preheat' function in standby). Therefore, the standby power consumption of the installation boiler with respect to the reference boiler is all that is needed to be known for the scaling procedure.

12.1.2. CALCULATION PROCEDURE

The following procedure has been used for transposing the reference test result to the installation system.

QF(IS)_AMCU = QF(RS)_AMCU ---------- (1)

QF(IS)_BLR = QF(RS)_BLR ---------- (2)

QF(IS)_TOT = QF(IS)_AMCU + QF(IS)_BLR ---------- (3)

QE(IS)_AMCU_OUT = QE(RS)_AMCU_OUT ---------- (4)

QE(IS)_AMCU_IN = QE(RS)_AMCU_IN ---------- (5)

QE(IS)_BLR = QE(RS)_BLR x (SP_IB/SP_RB) ---------- (6)

QE(IS)_NET = QE(IS)_AMCU_OUT - QE(IS)_AMCU_IN - QE(IS)_BLR - (7)

Where:

QF(IS)_AMCU = Calculated fuel energy used by *Add-On-MCU* in standby mode in the installation building

QF(RS)_AMCU = Measured fuel energy used by *Add-On-MCU* in standby mode during reference testing

QF(IS)_BLR = Calculated fuel energy used by the boiler in standby mode in the installation building

QF(RS)_BLR = Measured fuel energy used by the reference boiler in standby mode during reference testing

QF(IS)_TOT = Total calculated fuel energy used by the heating system in the installation building

QE(IS)_AMCU_OUT = Calculated electrical energy produced by *Add-On-MCU* in standby mode in the installation building

QE(RS)_AMCU_OUT = Measured electrical energy produced by *Add-On-MCU* in standby mode during reference testing

QE(IS)_AMCU_IN = Calculated electrical energy used by the *Add-On-MCU* in standby mode in the installation building

QE(RS)_AMCU_IN = Measured electrical energy used by the *Add-On-MCU* in standby mode during reference testing

QE(IS)_BLR = Calculated electrical energy used by the boiler system in standby mode in the installation building

QE(RS)_BLR = Measured electrical energy used by the reference boiler system in standby mode during reference testing

SP_IB = Declared standby electrical energy consumption of the boiler system in installation building

SP_RB = Declared standby electrical energy consumption of the reference boiler system used in reference testing

QE(IS)_NET = Calculated net electrical energy exported by the *Add-On-MCU* system in the installation dwelling

Notes: *The energy measurements are in MJ/24h*

12.2. PROCEDURE 02: CALCULATED DHW HEATING PERFORMANCE OF THE ADD-ON-MCU SYSTEM AT THE TARGET INSTALLATION BUILDING BASED ON THE REFERENCE DHW TESTS

12.2.1. ASSUMPTIONS

- It is assumed that the control logic, control parameters and the controls used in the installation system are same as those used in reference PAS 67 DHW heating tests.
- The DHW heating performance of the system in the installation dwelling will depend upon the hot water heating load.
- The methodology used for calculating the hot water heating performance depends upon the number of reference DHW heating tests carried out (e.g. Tapping Cycles 1,2,3 etc).

12.2.2. CALCULATION PROCEDURES

Case 1: No. PAS 67 DHW heating reference tests carried out = 1 (e.g. test T22.1)

a) The hot water heating load in the target installation building is less than or equal to the PAS 67 Reference DHW heating load

If QT(IS)_DHW <= QT(RS)_DHW(1) then

QT(IS)_DHW_AMCU = (QT(IS)_DHW/QT(RS)_DHW(1)) x QT(RS)_DHW_AMCU

QT(IS)_DHW_BLR = QT(IS)_DHW - QT(IS)_DHW_AMCU

End IF

b) The hot water heating load in the target installation building is greater than the PAS 67 Reference DHW heating load

If QT(IS)_DHW > QT(RS)_DHW(1) then

QT(IS)_DHW_AMCU = QT(RS)_DHW(2)

QT(IS)_DHW_BLR = QT(IS)_DHW - QT(IS)_DHW_AMCU

End IF

c) Applies to both (a) and (b)

R1 = QT(IS)_DHW_AMCU / QT(RS)_DHW_AMCU

ERATIO_BLR = DE_IBLR / DE_RBLR

ET(IBLR)_SYSTEM = ERATIO_BLR x E(RBLR)_SYSTEM (1) ET(IS)_AMCU = ET(RS)_AMCU(1)

EE(IS)_AMCU = EE(RS)_AMCU(1)

QF(IS)_AMCU = QT(IS)_DHW_AMCU x 100 / ET(IS)_AMCU

QF(IS)_BLR = QT(IS)_DHW_BLR x 100 / ET(IBLR)_SYSTEM

QF(IS)_TOT = QF(IS)_AMCU + QF(IS)_BLR

QE(IS)_AMCU_OUT = QF(IS)_AMCU x EE(RS)_AMCU(1)

QE(IS)_AMCU_IN = (1/R1) x QE(RS)_AMCU_IN

QE(IS)_BLR_IN = QE(RS)_BLR_IN x (SP_IB/SP_RB)

QE(IS)_NET = QE(IS)_AMCU_OUT - [QE(IS)_AMCU_IN + QE(IS)_BLR_IN]

Case 2: No. PAS 67 DHW heating reference tests carried out = 2 (e.g. tests T22.1 and T22.2)

a) The hot water heating load in the target installation building is less than or equal to the PAS 67 Reference DHW heating load in test T22.1.

If QT(IS)_DHW <= QT(RS)_DHW(1) then

QT(IS)_DHW_AMCU = (QT(IS)_DHW(1)/QT(RS)_DHW(1)) x QT(RS)_DHW_AMCU(1)

QT(IS)_DHW_BLR = QT(IS)_DHW - QT(IS)_DHW_AMCU

R1 = QT(IS)_DHW_AMCU / QT(RS)_DHW_AMCU

ERATIO_BLR = DE_IBLR / DE_RBLR

ET(IBLR)_SYSTEM = ERATIO_BLR x E(RBLR)_SYSTEM(1)

ET(IS)_AMCU= ET(RS)_AMCU(1)

EE(IS)_AMCU= EE(RS)_AMCU(1)

End IF

b) The hot water heating load in the target installation building is greater that the PAS 67 Reference DHW heating load in test T22.2

If QT(IS)_DHW > QT(RS)_DHW(2) then

QT(IS)_DHW_AMCU = QT(RS) DHW(2)

QT(IS)_DHW_BLR = QT(IS)_DHW – QT(IS)_DHW_AMCU

R1 = QT(IS)_DHW_AMCU / QT(RS)_DHW_AMCU

ERATIO_BLR = DE_IBLR / DE_RBLR

ET(IBLR)_SYSTEM = ERATIO_BLR x E(RBLR)_SYSTEM(2)

ET(IS)_AMCU = ET(RS)_AMCU(2)

EE(IS)_AMCU = EE(RS)_AMCU(2)

End IF

c) The hot water heating load in the target installation building is between the PAS 67 Reference DHW heating load in tests T22.1 and T22.2.

If [QT(IS)_DHW > QT(RS)_DHW(1)] AND [QT(IS)_DHW < QT(RS)_DHW(2)] then

Slope = [QT(RS)_DHW_AMCU(2) - QT(RS)_DHW_AMCU(1)] / [QT(RS)_DHW(2) - QT(RS_DHW(1)]

X1 = QT(IS)_DHW - QT(RS)_DHW(1)

QT(IS)_DHW_AMCU = QT(RS)_DHW_AMCU(1) + (X1 x Slope)

QT(IS)_DHW_BLR = QT(IS)_DHW - QT(IS)_DHW_AMCU

R1 = QT(IS)_DHW_AMCU / QT(RS)_DHW_AMCU

ERATIO_BLR = DE_IBLR / DE_RBLR

ET(IBLR)_SYSTEM = ERATIO_BLR x [(E(RBLR)_SYSTEM(1) + E(RBLR)_SYSTEM(2))/2]

ET(IS)_AMCU = (ET(RS)_AMCU(1) + ET(RS)_AMCU(2))/2

EE(IS)_AMCU = (EE(RS)_AMCU(1) +EE(RS)_AMCU(2))/2

End IF

d) Applies to (a), (b) and (c)

QF(IS)_AMCU = QT(IS)_DHW_AMCU x 100 / ET(IS)_AMCU

QF(IS)_BLR = QT(IS)_DHW_BLR x 100 / ET(IBLR)_SYSTEM

QF(IS)_TOT = QF(IS)_AMCU + QF(IS)_BLR

QE(IS)_AMCU_OUT = QF(IS)_AMCU x EE(IS)_AMCU

QE(IS)_AMCU_IN = (1/R1) x QE(RS)_AMCU_IN

QE(IS)_BLR_IN = QE(RS)_BLR_IN x (SP_IB/SP_RB)

QE(IS)_NET = QE(IS)_AMCU_OUT - [QE(IS)_AMCU_IN + QE(IS)_BLR_IN

Case 3: No. PAS 67 DWH heating reference tests carried out = 3(e.g. tests T22.1, T22.2 and T22.3)

a) The hot water heating load in the target installation building is less than or equal to the PAS 67 Reference DHW heating load in test T22.1.

If QT(IS)_DHW <= QT(RS)_DHW(1) then

QT(IS)_DHW_AMCU = (QT(IS)_DHW(1)/QT(RS)_DHW(1)) x QT(RS)_DHW_AMCU(1)

QT(IS)_DHW_BLR = QT(IS)_DHW - QT(IS)_DHW_AMCU

R1 = QT(IS)_DHW_AMCU / QT(RS)_DHW_AMCU

ERATIO_BLR = DE_IBLR / DE_RBLR

ET(IBLR)_SYSTEM = ERATIO_BLR x E(RBLR)_SYSTEM(1)

ET(IS)_AMCU = ET(RS)_AMCU(1)

EE(IS)_AMCU = EE(RS)_AMCU(1)

End IF

b) The hot water heating load in the target installation building is greater than the PAS 67 Reference DHW heating load in test T22.3.

If QT(IS)_DHW > QT(RS)_DHW(3) then

QT(IS)_DHW_AMCU = QT(RS)_DHW(3)

QT(IS)_DHW_BLR = QT(IS)_DHW - QT(IS)_DHW_AMCU

R1 = QT(IS)_DHW_AMCU / QT(RS)_DHW_AMCU

ERATIO_BLR = DE_IBLR / DE_RBLR

ET(IBLR)_SYSTEM = ERATIO_BLR x E(RBLR)_SYSTEM(3)

ET(IS)_AMCU = ET(RS)_AMCU(3)

EE(IS)_AMCU = EE(RS)_AMCU(3)

End IF

c) The hot water heating load in the target installation building is between the PAS 67 Reference DHW heating load in tests T22.1 and T22.2.

If [QT(IS)_DHW > QT(RS)_DHW(1)] AND [QT(IS)_DHW < QT(RS)_DHW(2)] then

Slope = [QT(RS)_DHW_AMCU(2) - QT(RS)_DHW_AMCU(1)] / [QT(RS)_DHW(2) - QT(RS_DHW(1)]

X1 = QT(IS)_DHW - QT(RS)_DHW(1)

QT(IS)_DHW_AMCU =QT(RS)_DHW_AMCU(1) + (X1 x Slope)

QT(IS)_DHW_BLR = QT(IS)_DHW - QT(IS)_DHW_AMCU

R1 = QT(IS)_DHW_AMCU / QT(RS)_DHW_AMCU

ERATIO_BLR = DE_IBLR / DE_RBLR

ET(IBLR)_SYSTEM = ERATIO_BLR x [(E(RBLR)_SYSTEM(1) + E(RBLR)_SYSTEM(2))/2]

ET(IS)_AMCU = (ET(RS)_AMCU(1) + ET(RS)_AMCU(2))/2

EE(IS)_AMCU = (EE(RS)_AMCU(1) +EE(RS)_AMCU(2))/2

End IF

d) The hot water heating load in the target installation building is between the PAS 67 Reference DHW heating load in tests T22.2 and T22.3.

If [QT(IS)_DHW > QT(RS)_DHW(2)] AND [QT(IS)_DHW < QT(RS)_DHW(3)] then

Slope = [QT(RS)_DHW_AMCU(3) - QT(RS)_DHW_AMCU(2)] / [QT(RS)_DHW(3) - QT(RS_DHW(2)]

X1 = QT(IS)_DHW - QT(RS)_DHW(2)

QT(IS)_DHW_AMCU = QT(RS)_DHW_AMCU(2) + (X1 x Slope)

QT(IS)_DHW_BLR = QT(IS)_DHW - QT(IS)_DHW_AMCU

R1 = QT(IS)_DHW_AMCU / QT(RS)_DHW_AMCU

ERATIO_BLR = DE_IBLR / DE_RBLR

ET(IBLR)_SYSTEM = ERATIO_BLR x [(E(RBLR)_SYSTEM(2) + E(RBLR)_SYSTEM(3))/2]

ET(IS)_AMCU = (ET(RS)_AMCU(2) + ET(RS)_AMCU(3))/2

EE(IS)_AMCU = (EE(RS)_AMCU(2) +EE(RS)_AMCU(3))/2

End IF

e) Applies to (a), (b), (c) and (d)

QF(IS)_AMCU = QT(IS)_DHW_AMCU x 100 / ET(IS)_AMCU

QF(IS)_BLR = QT(IS)_DHW_BLR x 100 / ET(IBLR)_SYSTEM

QF(IS)_TOT = QF(IS)_AMCU + QF(IS)_BLR

QE(IS)_AMCU_OUT = QF(IS)_AMCU x EE(IS)_AMCU

QE(IS)_AMCU_IN = (1/R1) x QE(RS)_AMCU_IN

QE(IS)_BLR_IN = QE(RS)_BLR_IN x (SP_IB/SP_RB)

QE(IS)_NET = QE(IS)_AMCU_OUT - [QE(IS)_AMCU_IN + QE(IS)_BLR_IN]

Where:

QT(IS)_DHW = Total energy required for DHW heating in the installation building

QT(RS)_DHW(n) = Total energy supplied for DHW heating in the reference test, n

QT(IS)_DHW_AMCU = Calculated energy supplied by *AMCU* for DHW heating in installation building

QT(RS)_DHW_AMCU(n) = Measured energy supplied by *AMCU* for DHW heating during reference test, n

QT(IS)_DHW_BLR = Calculated energy supplied by boiler for DHW heating in installation building

ERATIO_BLR = Efficiency ratio of boiler in installation building and the reference test boiler

DE_IBLR = Declared gross thermal efficiency of the reference test boiler

DE_RBLR = Declared gross thermal efficiency of the boiler in the installation building

ET(IBLR)_SYSTEM = Calculated gross thermal efficiency of the boiler system in the installation building

E(RBLR)_SYSTEM(n) = Measured gross thermal efficiency of reference boiler during DHW heating reference test, n

ET(IS)_AMCU = Calculated gross thermal efficiency of *AMCU* in the installation building

ET(RS)_AMCU(n) = Measured gross thermal efficiency of *AMCU* during DHW heating reference test, n

EE(IS)_AMCU = Calculated gross electrical efficiency of *AMCU* in the installation building

EE(RS)_AMCU(1) = Measured gross electrical efficiency of *AMCU* during DHW heating reference test, n

QF(IS)_AMCU = Calculated fuel energy used by AMCU for DHW heating in the installation building

QF(IS)_BLR = Calculated fuel energy used by Boiler for DHW heating in the installation building

QF(IS)_TOT = Calculated total fuel energy used for DHW in the installation building

QE(IS)_AMCU_OUT = Calculated electrical energy produced by the *AMCU* in the installation building

QE(RS)_AMCU_IN = Measured electrical energy used by *AMCU* during reference testing

QE(IS)_BLR_IN = Calculated electrical energy used by the boiler in the installation building

QE(RS)_BLR_IN = Measured electrical energy used by boiler during reference testing

QE(IS)_NET = Net electrical energy exported by the system in the installation building

<u>Notes</u>

a) *The energy measurements are in MJ/24h*

b) *Efficiency measurements are in %*

c) *AMCU = Add-On-MCU*

12.3. PROCEDURE 03: CALCULATED SPACE HEATING PERFORMANCE OF THE ADD-ON-MCU SYSTEM AT THE TARGET INSTALLATION BUILDING BASED ON THE REFERENCE SPACE HEATING TESTS

12.3.1. ASSUMPTIONS

- It is assumed that the control logic, control parameters and the controls used in the installation system are the same as those used in reference PAS 67 DHW heating tests.
- The electricity consumed by the installation boiler system will depend upon the standby power consumption and this has been taken into account in the calculating procedures.
- The methodology used for calculating the space heating performance depends upon the number of reference heating tests carried out and this is specified below.

12.3.2. CALCULATION PROCEDURES

Slope_1 = [QT(RS)_SH_AMCU(LF = 30%) – QT(RS)_SH_AMCU(LF = 10%)] / [QT(RS)_SH(LF = 30%) – QT(RS)_SH(LF = 10%)]

Slope_2 = [QT(RS)_SH_AMCU(LF = 60%) – QT(RS)_SH_AMCU(LF = 30%)] / [QT(RS)_SH(LF = 60%) – QT(RS)_SH(LF = 30%)]

Slope_3 = [QT(RS)_SH_AMCU(LF = 100%) – QT(RS)_SH_AMCU(LF = 60%)] / [QT(RS)_SH(LF = 100%) – QT(RS)_SH(LF = 60%)]

a) Space heating load in the installation dwelling at selected load factor

IS_LF = 10%

QT(IS)_SHL = QT(IS)_SHL_MAX x IS_LF /100

QT(SH)_LR = QT(IS)_SHL / QT(RS)_TOT(IS_LF)

b) The space heating load, QT(IS)_SHL, is between the 10% heating load factor test (No 4) AND 30% heating load factor test (No 3).

If QT(IS)_SHL >= QT(RS)_SH(LF = 10%) AND QT(IS)_SHL < QT(RS)_SH(LF = 30%) then

X1 = QT(IS)_SHL – QT(RS)_SH(LF = 10%)

QT(IS)_SH_AMCU = QT(RS)_SH_AMCU(LF = 10%) + (X1 x Slope_1)

QT(IS)_SH_BLR = QT(IS)_SHL – QT(IS)_SH_AMCU

QT(IS)_SH_TOT = QT(IS)_SH_AMCU + QT(IS)_SH_BLR

QF(IS)_SH_AMCU = QT(IS)_SH_AMCU x [100 / ((ET(RS)_AMCU(LF = 10%) + ET(RS)_AMCU(KF = 30%))/2)]

QF(IS)_SH_BLR = QT(IS)_SH_BLR x [100 / ((ET(RS)_BLR(LF = 10%) + ET(RS)_BLR(LF = 30%))/2)]

QF(IS)_SH_TOT = QF(IS)_SH_AMCU + QF(IS)_SH_BLR

QE(IS)_AMP_OUT = QF(IS)_AMCU x [100 / ((EE(RS)_AMCU(LF = 10%) + EE(RS)_AMCU(LF = 10%))/2)]

QE(IS)_AMCU_IN = ((QE(IS)_AMCU_IN(LF = 10%) + QE(IS)_AMCU_IN(LF = 30%))/2) x [1 / QT(SH)_LR]

QE(IS)_BLR = ((QE(RS)_BLR(LF = 10%) + QE(RS)_BLR(LF = 30%))/2) x QT(SH)_LR

QE(IS)_NET = QE(IS)_AMP_OUT – [QE(IS)_AMCU_IN + QE(IS)_BLR]

ET(IS)_AMCU = QT(IS)_SH_AMCU x [100 / QF(IS)_SH_AMCU]

EE(IS)_AMCU = QE(IS)_AMP_OUT x [100 / QF(IS)_SH_AMCU]

ET(IS)_BLR = QT(IS)_BLR x [100 / QF(IS)_BLR

End IF

c) The space heating load, QT(IS)_SHL, is between the 30% heating load factor test (No 3) AND 60% heating load factor test (No 2).

If QT(IS)_SHL >= QT(RS)_SH(LF = 30%) AND QT(IS)_SHL < QT(RS)_SH(LF = 60%) then

X1 = QT(IS)_SHL – QT(RS)_SH(LF = 30%)

QT(IS)_SH_AMCU = QT(RS)_SH_AMCU(LF = 30%) + (X1 x Slope_2)

QT(IS)_SH_BLR = QT(IS)_SHL – QT(IS)_SH_AMCU

QT(IS)_SH_TOT = QT(IS)_SH_AMCU + QT(IS)_SH_BLR

QF(IS)_SH_AMCU = QT(IS)_SH_AMCU x [100 / ((ET(RS)_AMCU(LF = 30%) + ET(RS)_AMCU(KF = 60%))/2)]

QF(IS)_SH_BLR = QT(IS)_SH_BLR x [100 / ((ET(RS)_BLR(LF = 30%) + ET(RS)_BLR(LF = 60%))/2)]

QF(IS)_SH_TOT = QF(IS)_SH_AMCU + QF(IS)_SH_BLR

QE(IS)_AMP_OUT = QF(IS)_AMCU x [100 / ((EE(RS)_AMCU(LF = 30%) + EE(RS)_AMCU(LF = 60%))/2)]

QE(IS)_AMCU_IN = ((QE(IS)_AMCU_IN(LF = 30%) + QE(IS)_AMCU_IN(LF = 60%))/2) x [1 / QT(SH)_LR]

QE(IS)_BLR = ((QE(RS)_BLR(LF = 30%) + QE(RS)_BLR(LF = 60%))/2) x QT(SH)_LR

QE(IS)_NET = QE(IS)_AMP_OUT – [QE(IS)_AMCU_IN + QE(IS)_BLR]

ET(IS)_AMCU = QT(IS)_SH_AMCU x [100 / QF(IS)_SH_AMCU]

EE(IS)_AMCU = QE(IS)_AMP_OUT x [100 / QF(IS)_SH_AMCU]

ET(IS)_BLR = QT(IS)_BLR x [100 / QF(IS)_BLR

End IF

d) The space heating load, QT(IS)_SHL, is between the 60% heating load factor test (No 2) AND 100% heating load factor test (No 1).

If QT(IS)_SHL >= QT(RS)_SH(LF = 60%) AND QT(IS)_SHL < QT(RS)_SH(LF = 100%) then

X1 = QT(IS)_SHL – QT(RS)_SH(LF = 60%)

QT(IS)_SH_AMCU = QT(RS)_SH_AMCU(LF = 30%) + (X1 x Slope_3)

QT(IS)_SH_BLR = QT(IS)_SHL – QT(IS)_SH_AMCU

QT(IS)_SH_TOT = QT(IS)_SH_AMCU + QT(IS)_SH_BLR

QF(IS)_SH_AMCU = QT(IS)_SH_AMCU x [100 / ((ET(RS)_AMCU(LF = 60%) + ET(RS)_AMCU(KF = 100%))/2)]

QF(IS)_SH_BLR = QT(IS)_SH_BLR x [100 / ((ET(RS)_BLR(LF = 60%) + ET(RS)_BLR(LF = 100%))/2)]

QF(IS)_SH_TOT = QF(IS)_SH_AMCU + QF(IS)_SH_BLR

QE(IS)_AMP_OUT = QF(IS)_AMCU x [100 / ((EE(RS)_AMCU(LF = 60%) + EE(RS)_AMCU(LF = 100%))/2)]

QE(IS)_AMCU_IN = ((QE(IS)_AMCU_IN(LF = 60%) + QE(IS)_AMCU_IN(LF = 100%))/2) x [1 / QT(SH)_LR]

QE(IS)_BLR = ((QE(RS)_BLR(LF = 60%) + QE(RS)_BLR(LF = 100%))/2) x QT(SH)_LR

QE(IS)_NET = QE(IS)_AMP_OUT – [QE(IS)_AMCU_IN + QE(IS)_BLR]

ET(IS)_AMCU = QT(IS)_SH_AMCU x [100 / QF(IS)_SH_AMCU]

EE(IS)_AMCU = QE(IS)_AMP_OUT x [100 / QF(IS)_SH_AMCU]

ET(IS)_BLR = QT(IS)_BLR x [100 / QF(IS)_BLR

End IF

e) The space heating load, QT(IS)_SHL, in the target installation building is greater than PAS 67 Reference space heating 100% load factor test number 1 (e.g. T1).

If QT(IS)_SHL >= QT(RS)_SH(LF=100%) then

QT(IS)_SH_AMCU = QT(RS)_SH_AMCU(LF=100%)

QT(IS)_SH_BLR = QT(IS)_SHL – QT(IS)_SH_AMCU

QT(IS)_SH_TOT= QT(IS)_SH_AMCU + QT(IS)_SH_BLR

QF(IS)_SH_AMCU = QT(IS)_SH_AMCU x [100 / ET(RS)_AMCU(LF=100%)]

QF(IS)_SH_BLR = QT(IS)_SH_BLR x [100 / ET(RS)_BLR(LF=100%)]

QF(IS)_SH_TOT = QF(IS)_SH_AMCU + QF(IS)_SH_BLR

QE(IS)_AMP_OUT= QF(IS)_AMCU x [100 / EE(RS)_AMCU(LF=100%)]

QE(IS)_AMCU_IN = QE(IS)_AMCU_IN(LF=10%) x [1 / QT(SH)_LR]

QE(IS)_BLR = QE(RS)_BLR(LF=100%) x QT(SH)_LR

QE(IS)_NET = QE(IS)_AMP_OUT – [QE(IS)_AMCU_IN + QE(IS)_BLR]

ET(IS)_AMCU = QT(IS)_SH_AMCU x [100 / QF(IS)_SH_AMCU]

EE(IS)_AMCU=QE(IS)_AMP_OUT x [100 / QF(IS)_SH_AMCU]

ET(IS)_BLR = QT(IS)_BLR x [100 / QF(IS)_BLR

End IF

f) Calculated results for other load factors

Repeat steps a) to f) for 30%, 60% and 100% load factors

Where: -

IS_LF = Installation system load factor, [%]

QT(IS)_SHL= Calculated total space heating load for the installation dwelling at specified load factor, [MJ/24h]

QT(SH)_AMCU_MAX = Maximum thermal energy that can be supplied by *Add-On-MCU* for space heating, [MJ/24h]

QT(IS)_SHL_MAX = Total thermal energy required for space heating in installation building at LF=100%, [MJ/24h]

QT(RS)_SH_AMCU(LF = n%)=Measured heating load supplied by *Add-On-MCU* during reference testing at LF=n, [MJ/24h]

QT(RS)_SH_BLR(LF = n%) = Measured heating load supplied by reference boiler during reference testing at LF = n, [MJ/24h]

QT(RS)_SH(LF = n%) = Measured total space heating load supplied by the reference test system at LF = n, [MJ/24h]

QT(SH)_LR = Calculated total space heating load ratio at selected LF = n, [--]

QT(RS)_TOT(LF=n%) = Measured total heating load supplied by reference test system at LF = n, [MJ/24h]

QT(IS)_SH_AMCU = Calculated energy supplied for heating by *Add-On-MCU* in building at specified LF, [MJ/24h]

QT(IS)_SH_BLR = Calculated energy supplied for heating by *boiler* in building at specified LF, [MJ/24h]

QT(IS)_SH_TOT = Calculated total space heating load for the installation dwelling at specified load factor, [MJ/24h]

QF(IS)_SH_AMCU = Calculated fuel used for heating by *Add-On-MCU* in building at specified LF, [MJ/24h]

QF(IS)_SH_BLR = Calculated fuel used for heating by *Boiler* in building at specified LF, [MJ/24h]

QF(IS)_SH_TOT = Calculated total fuel used by heating system in the installation building at specified LF, [MJ/24h]

ET(RS)_AMCU(LF = n%) = Measured gross thermal efficiency of *Add-On-MCU* during reference testing at LF=n%, [%]

ET(RS)_BLR(LF = n%)= Measured gross thermal efficiency of *Boiler System* during reference testing at LF=n%, [%]

EE(RS)_AMCU(LF = n%) = Measured gross electrical efficiency of *Add-On-MCU* during reference testing at LF=n%, [%]

QE(IS)_AMP_OUT = Calculated electrical energy produced by *Add-On-MCU* in the building at specified LF, [MJ/24h]

QE(IS)_AMCU_IN = Calculated electrical energy used by *Add-On-MCU* in the building at specified LF, [MJ/24h]

QE(IS)_BLR = Calculated electrical energy used by *Boiler System* in the building at specified LF, [MJ/24h]

QE(IS)_NET = Calculated net electrical energy produced by *Add-On-MCU* in the building at specified LF, [MJ/24h]

ET(IS)_AMCU = Calculated gross thermal efficiency of *Add-On-MCU* in building at specified LF,[%]

EE(IS)_AMCU = Calculated gross electrical efficiency of *Add-On-MCU* in building at specified LF, [%]

ET(IS)_BLR = Calculated gross thermal efficiency of *Boiler System* in building at specified LF, [%]

AMENDMENTS ISSUED SINCE PUBLICATION

Document Number:	Amendment Details:	Date:
1.0	First Issue	
1.1	Rebranding of document, update of email and website addresses and cosmetic changes.	10/07/2019